Ford Model A

Wiring Diagram
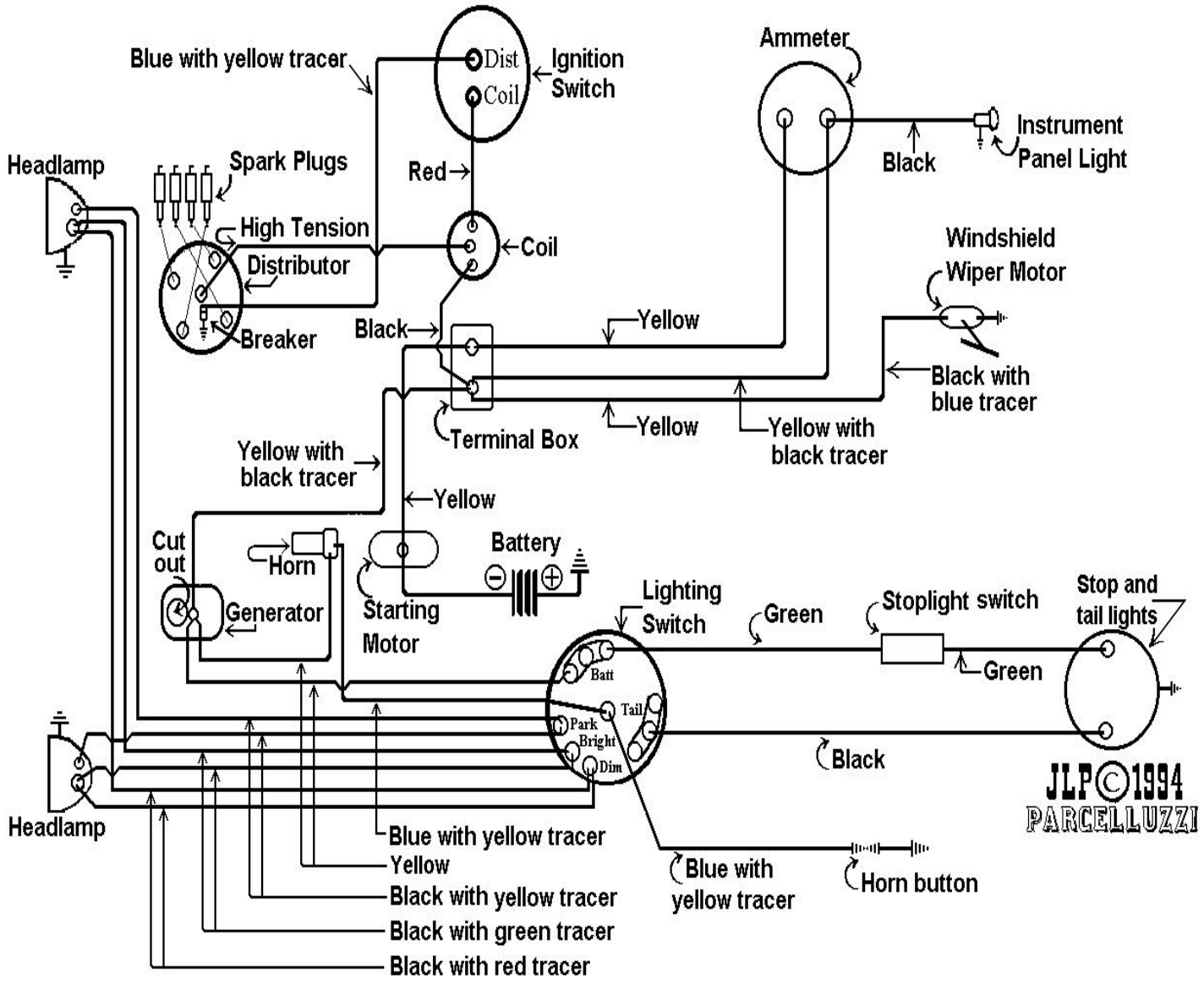
1929 - 1931 Without Cowl Lights